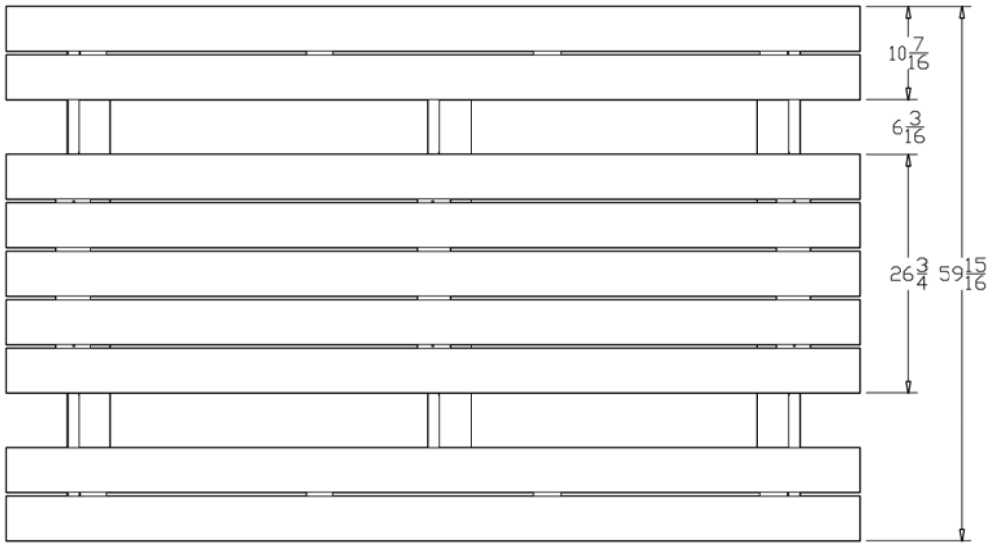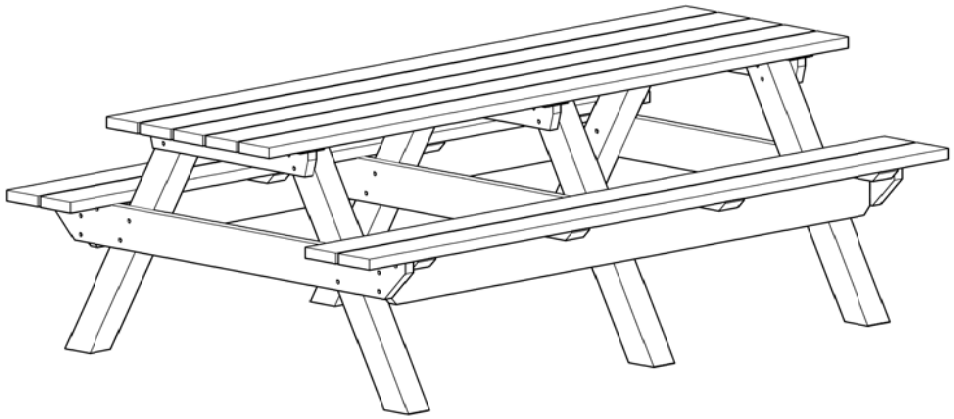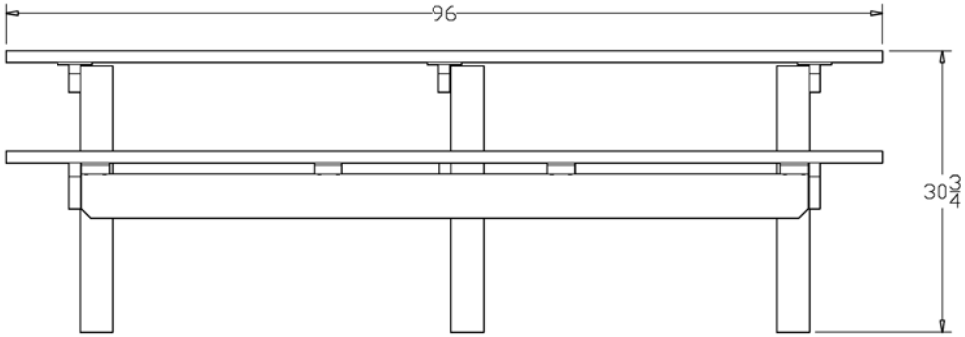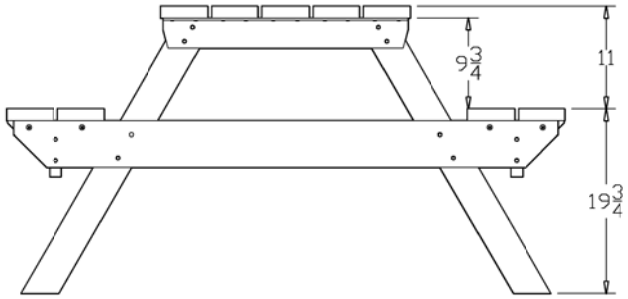ASM-EPT8-00